TERRASMART COMPOSITE DECKING SYSTEM

INSTALL GUIDE

EQUIPMENT

Mitre Saw

Tape Measure

Spirit Level

Angle Grinder

Cordless Drill

Router

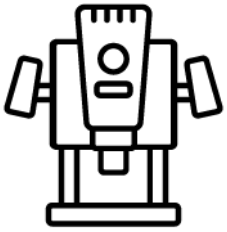

Laser Level

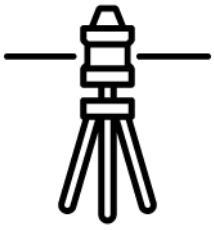

Site PPE

IMPORTANT NOTES

- Gaps between board ends should be approximately 4-6mm to allow for expansion.
- Some NHBC schemes require a 10mm gap around perimeter edge of area for drainage; the starter clip provides this on clipped sides of your area but keep this in mind when setting out your substructure.
- Cutting of Composite Decking boards should be carried out with a mitre saw with dust control.
- Use offcuts of material where possible, to minimise waste.
- Where joists are to be butted end-on-end, ensure there is pedestal support underneath connecting the two joists.
- Always use appropriate torque setting on cordless screwdrivers to reduce the possibility of overtightening.
- Always use correct PPE throughout installation.
- Typical spacings shown within this guide are based on standard system design conditions. Project-specific loads, finishes, build-ups or design requirements may require alternative or reduced support spacings. Always refer to the project-specific design information where provided. Where requirements are unclear, contact the RYNO Technical Team before installation.

INSTALLATION GUIDANCE

1) Determine decking direction.
2) Lay the joists out on the substrate perpendicular to the decking direction, at 400mm centres (as per board span, see datasheet). Fix ends of joists to perimeter joist frame, using angle brackets, as shown. Fig A.

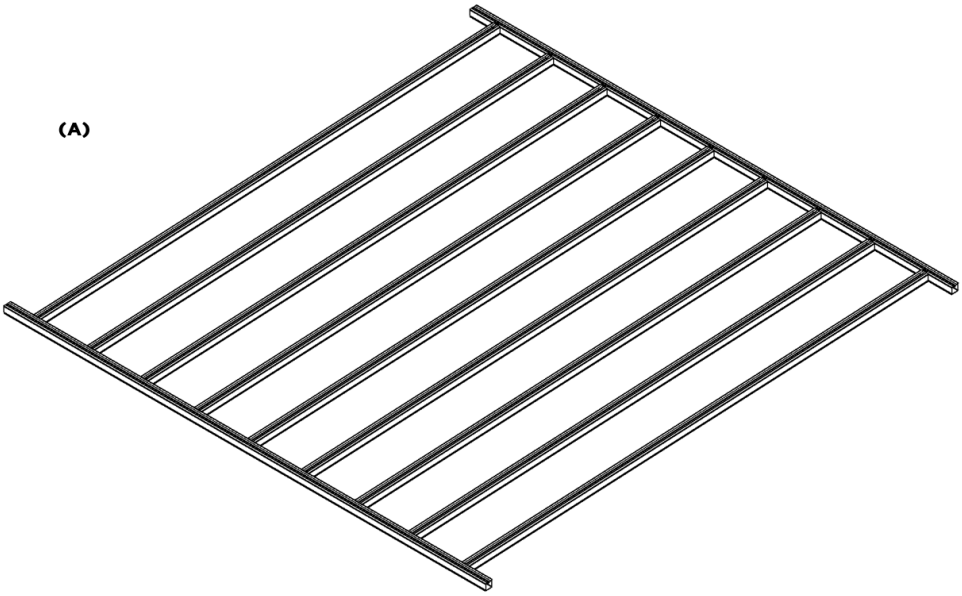

NB: Wherever board ends meet, a double joist is required to provide sufficient support for ends of board when expansion / contraction occurs.

3) Lift the joists onto the supports, which should be placed at each end of the joist, and level up to the required height (FFL minus board depth). **Fig B.**

(B)

4) If using adjustable pedestal supports, fasten the joist to the pedestal head using 13mm self-drill screws. **Fig C.**

(C)

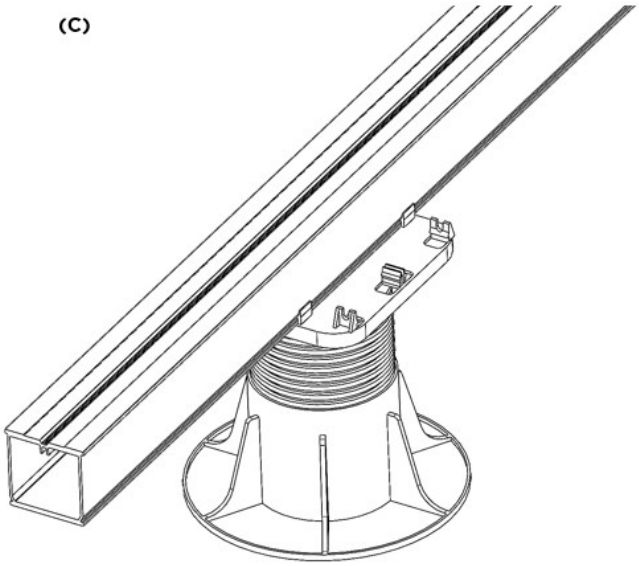

5) Add the intermediate supports at the required centres along the joist (as per the joist span, see datasheet). **Fig D.**

(D)

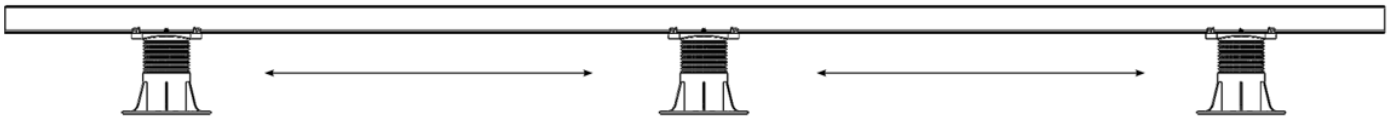

6) Once all joists are level and fully supported, establish where the first board will be laid, and install the starter/end clip along the ends of the joist ready for the first row of boards. **Fig E.**

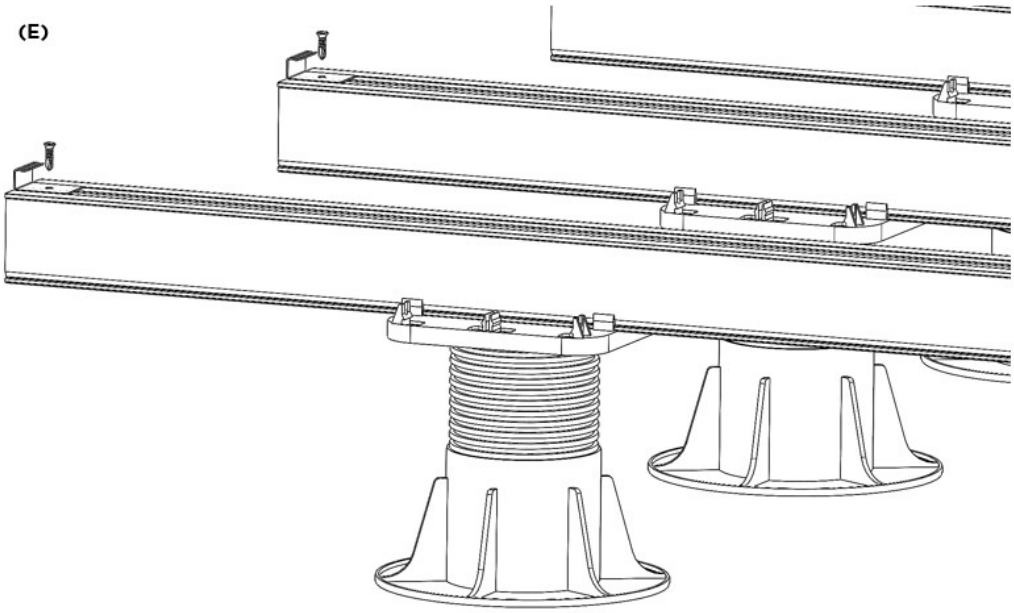

7) Slide first deck board into the clips and secure the other side of the board using plastic T-clips and 30mm black screws, directly through fixing channel of joist. **Fig F.**

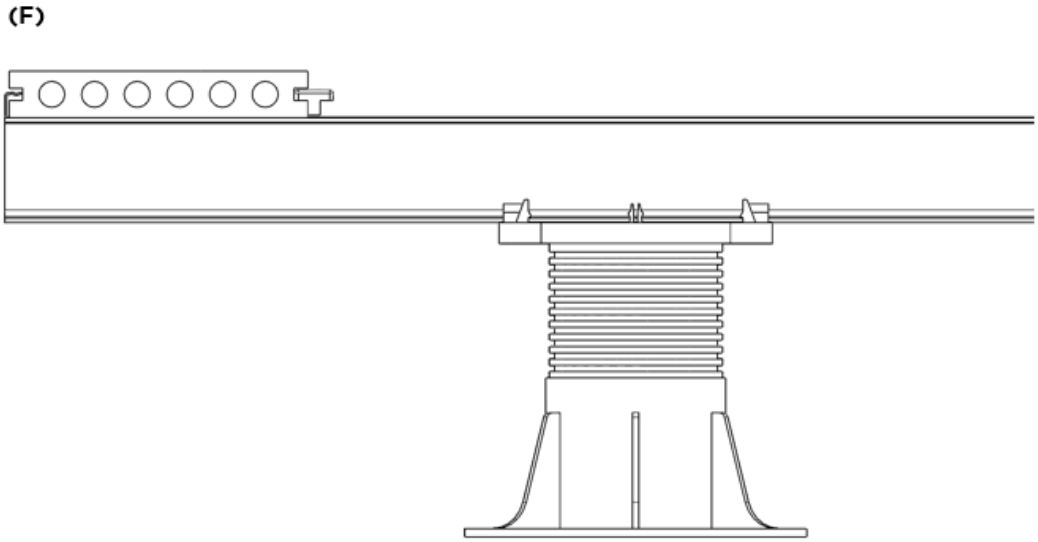

8) Slide the second row of decking boards into place, ensuring the overall length of board run is aligned with your laser guide to keep board runs straight. Note: as Composite Decking can expand in higher temperatures, it is good practice to direct fix using a 30mm screw in the centre of each board (**Fig H**). It is important that spaces are left between the board ends to compensate for any temperature-related movement. **Fig G**.

(G)

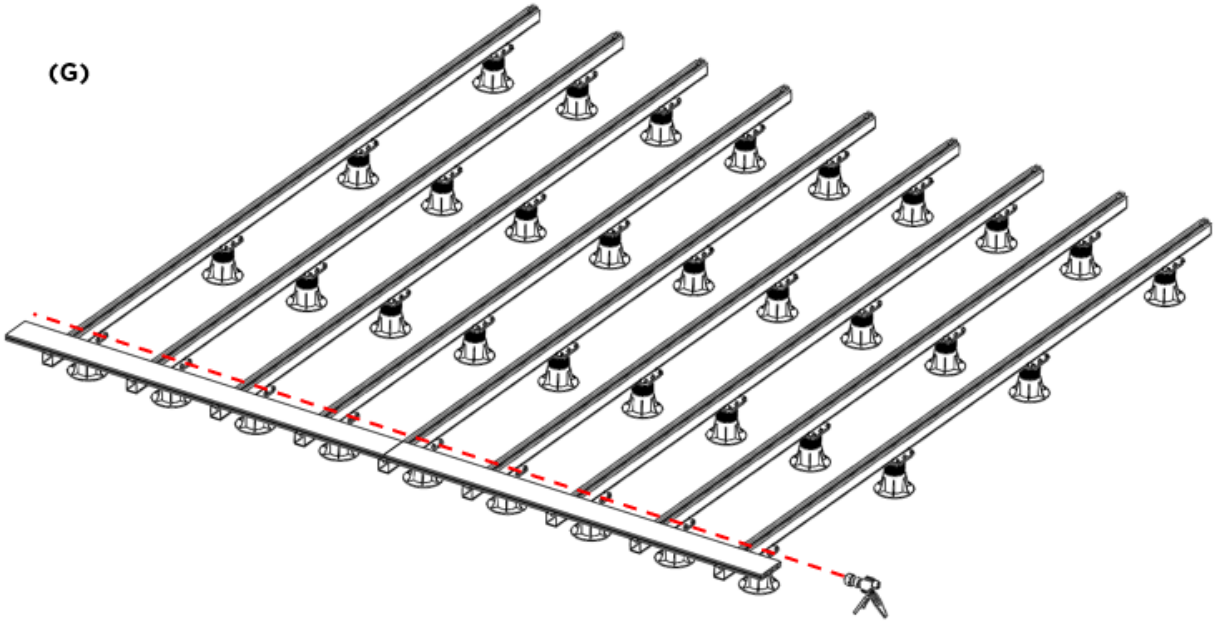

(H)

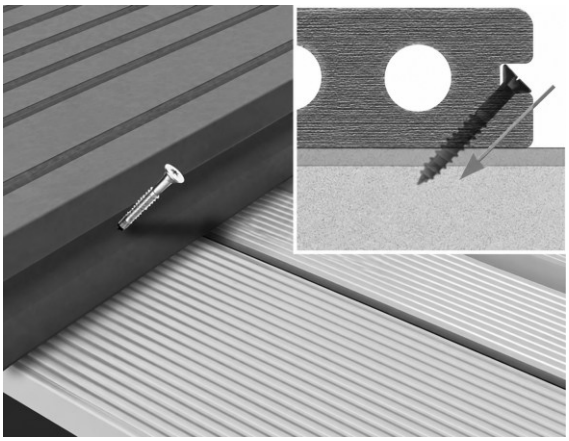

9) Repeat step 7) one board row at a time, until you reach the second-to-last board.

10) Fitting the last board:
   a) Loose-lay the second-to-last board run and measure the remaining space, remembering to account for the width of the plastic T-clip and starter/end clip.
      i) If a full board width fits perfectly, go straight to step 10)b) and continue from there.
      ii) If the last gap is smaller than the board width, you will need to cut the board down to the required width. Note that once width is cut down, this removes the fixing channel, so you may need to modify the cut side of the board using a router to receive the starter/end clip. **Fig I**.

(I)

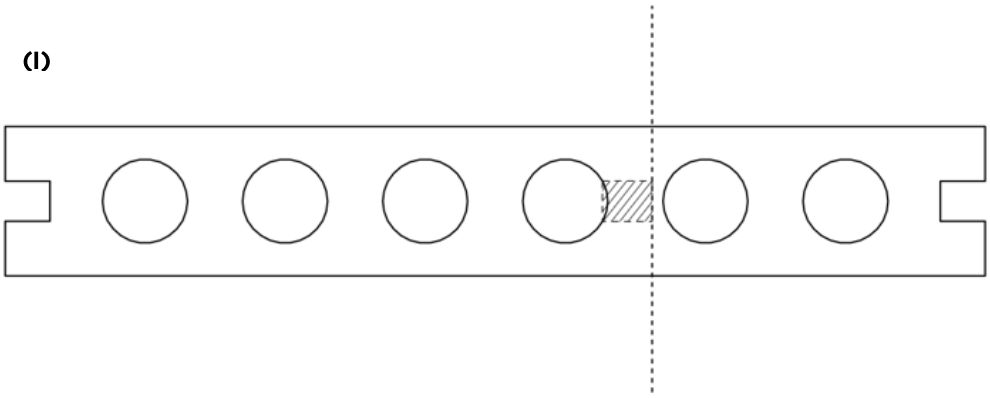

   b) Affix starter/end clip to the outside end of the joists.
   c) Place the last row of board on the joists and push firmly onto the starter/end clip.
   d) Lift the second-to-last board up at a slight angle, to enable you to slide a plastic T-clip into the fixing grooves. **Fig J**.

(J)

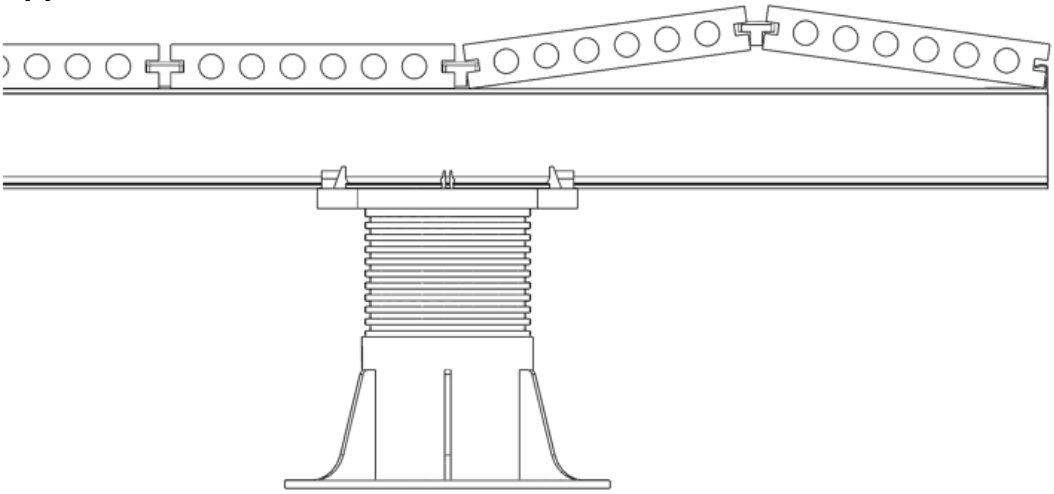

   e) Still holding this board up at an angle, use a screwdriver or your cordless drill to slide the plastic T-clip along the groove until it's over the joist, repeating until there is a clip over each joist.
   f) Use gentle pressure to pivot the raised board down onto the joists.
11) Fasten the clips down using the screws provided. The TerraSmart Composite Decking is now complete.

LET'S TALK
sales@rynosystems.com
+44 203 967 3500
rynosystems.com

HEAD OFFICE
2 Sutton Lane
London
EC1M 5PU

STUDIO
CastlePoint
Castle Way, Ellon
AB41 9RG